BenchMark Wireline Products
36220 FM 1093
P. O. BOX 850
Simonton, Texas 77476
Phone: 281.342.6415
Fax: 281.342.4848
benchmarkwireline.com

850 CHAIN DRIVE CASED HOLE DRUM
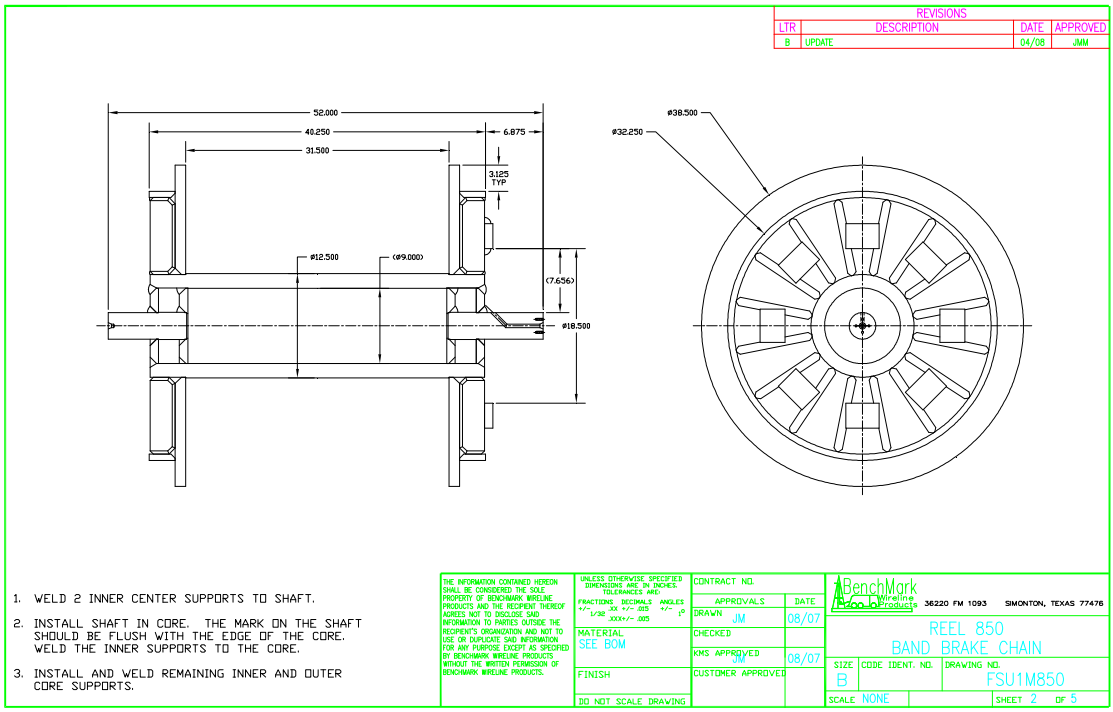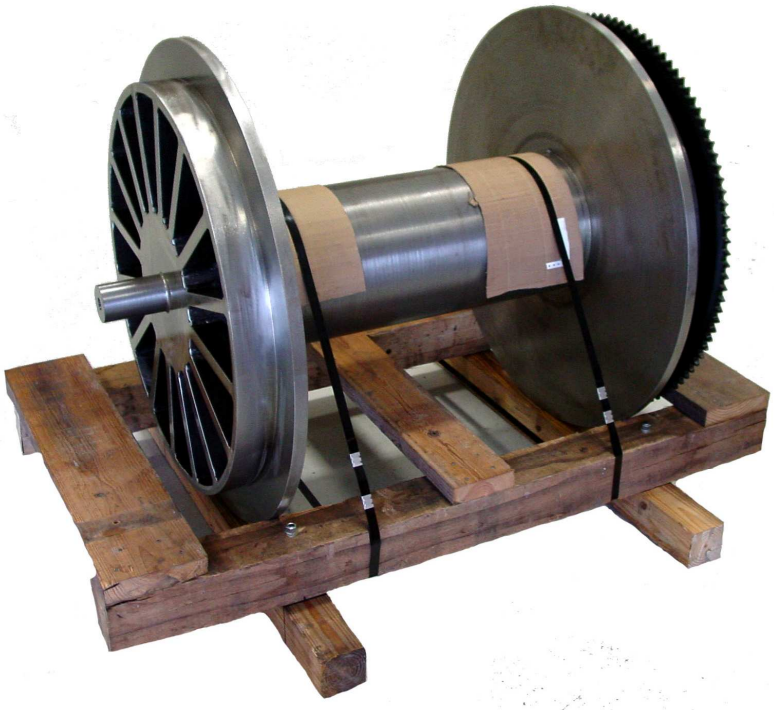
26,000 FEET – 8000 METERS OF 7/32” CABLE CAPACITY